Supplier Document
Front Sheet

DOCUMENT NUMBER	ASSET CODE	SUB PROJECT CODE	SUPPLIER ID CODE	DOCUMENT TYPE (SDRS CODE)	SEQUENCE NUMBER	SHEET NUMBER	REVISION NUMBER
	KE01	A1	PYPM07A	F05	0009	000	002

PROJECT NUMBER	109495		
DOCUMENT TITLE	Cross Sectional Drawings with part list for Pre-Treatment Feed Pumps (A1-570-PA-065 A/B)		
SUPPLIER NAME	TERMOMECCANICA POMPE S.p.A.		TMP Doc.No.: 2045395010 TMP Rev.: 01
CONTRACT NUMBER	UI166584		
PURCHASE ORDER NUMBER	109495-PPFM101	SUPPLIER PURCHASE ORDER NUMBER	109495-PPFM101
PURCHASE ORDER DESCRIPTION	Low Energy pumps (API and Non API)		
TAG NUMBER	(A1-570-PA-065 A/B)		

☐	I	ACCEPTED FOR INFORMATION ONLY
☐	R	RETURNED WITH COMMENTS
☐	U	UNACCEPTABLE- MAJOR COMMENTS.
☐	F	ACCEPTED – NO COMMENTS / MINOR COMMENTS

RESPONSIBLE ENGINEER'S NAME, SIGNATURE & DATE:

NAME: SIGN: DATE:

Hold Record

Hold Nr.	Section	Description of Hold
<1>		

Revision Tracking

Rev.	Date	Description of Revision
001	16/07/2021	Issued for Review
002	18/10/2021	Issued for Review

KE01-A1-PYPM07A-F05-0009-000

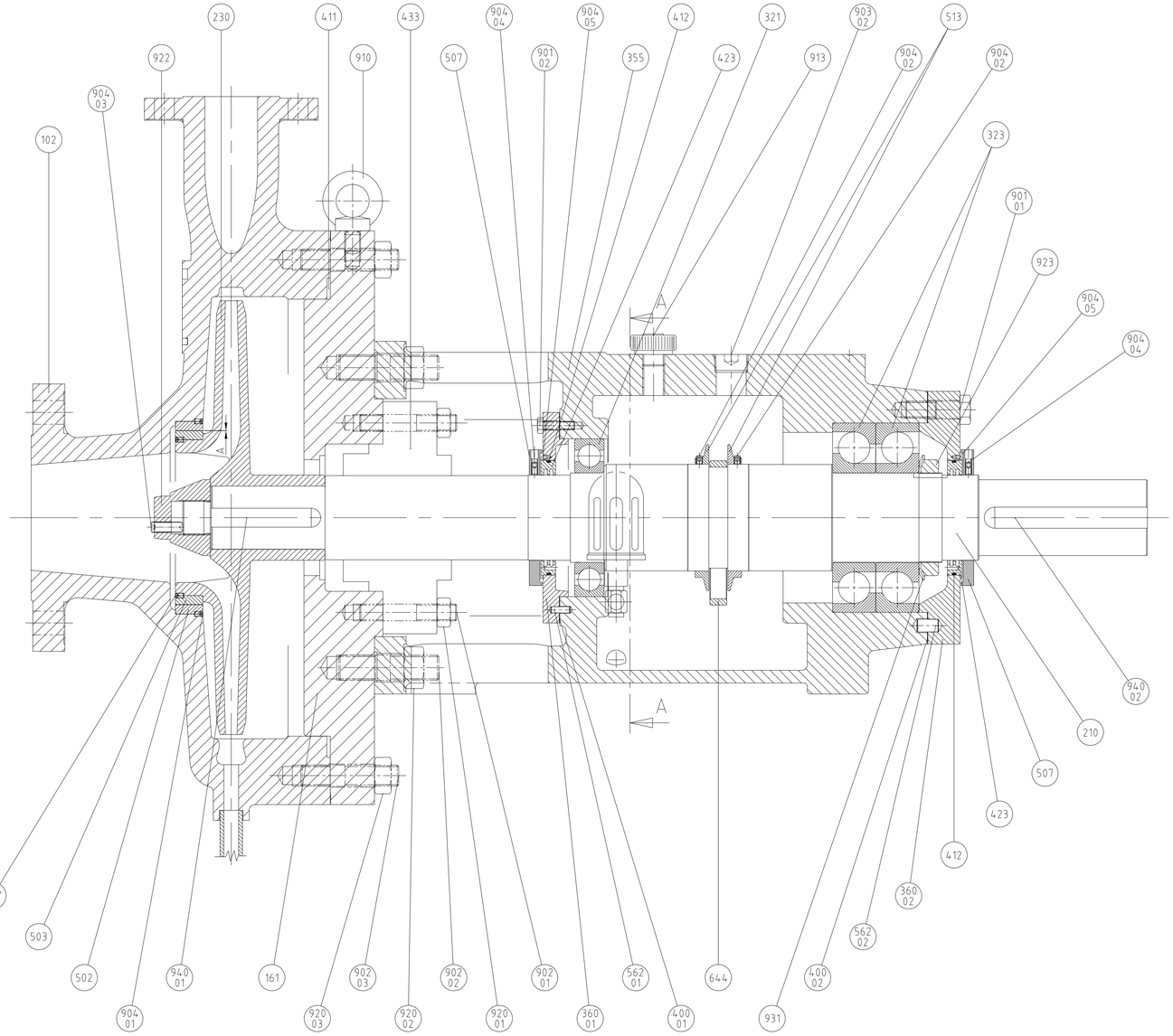

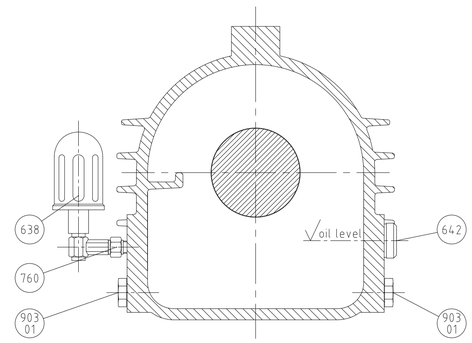

SECTION A-A
SEZIONE A-A

710-01	PIPE 1/2" SCH.160 TUBO 1/2" SCH.160	1	ASTM B444 UNS N06625
710-02	PIPE 1/2" SCH.80 TUBO 1/2" SCH.80	1	ASTM B444 UNS N06625
723-01	FLANGE WELDING NECK 1/2" 300#RF FLANGIA WELDING NECK 1/2" 300# RF	4	ASTM B564 UNS N06625
411-01	SPIRALWOUND GASKET 1/2" GURNIZIONE SPIRO METALLICA 1/2"	3	GRAPHITE + ALLOY 625
902-01	SCREW 1/2" UNC L=55 VITE 1/2" UNC L=55	8	ASTM A320 Gr.L7
920-01	NUT 1/2" UNC DADO 1/2" UNC	8	ASTM A194 Gr.7
757-01	ORIFICE PLATE 1/2" LENTE TARATA 1/2"	1	ASTM B443 UNS N06625
710-03	PIPE 3/4" SCH.160 TUBO 3/4" SCH.160	1	ASTM B444 UNS N06625
723-02	FLANGE WELDING NECK 3/4" 300#RF FLANGIA WELDING NECK 3/4" 300# RF	1	ASTM B564 UNS N06625
741-01	BALL VALVE 3/4" VALVOLA A SFERA 3/4"	1	ASTM B564 UNS N06625

REFERENCE DRAWINGS: / ССЫЛОЧНЫЕ ЧЕРТЕЖИ:

KE01-A1-PYPM07A-B01-0009-000 General Arrangment Drawing with Foundation details for Pre-Treatment Feed Pumps (A1-570-PA-065 A/B)

KE01-A1-PYPM07A-D03-0009-000 Pump Data Sheet for Pre-Treatment Feed Pumps (A1-570-PA-065 A/B)

KE01-A1-PYPM07A-F99-0001-000 Mechnical Seal Detail Drawing with Index for all Pumps

KE01-A1-PYPM07A-Q03-0003-000 Pump Inspection & Test Plan for Non-API Pumps

NOTES: / ПРИМЕЧАНИЯ:

LEGEND: / УСЛОВНЫЕ ОБОЗНАЧЕНИЯ:

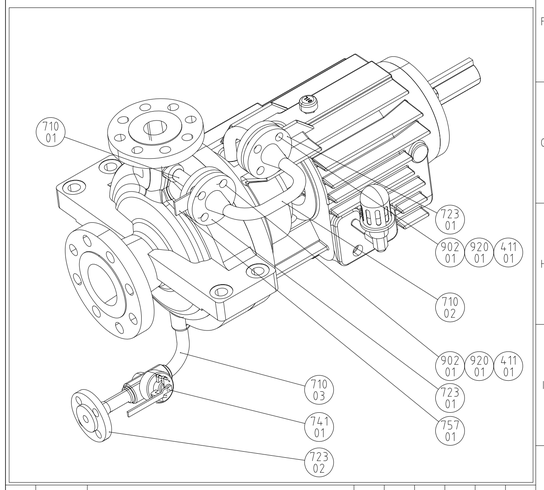

102	VOLUTE CASING VOLUTA	1	ASTM A494 CW6MC (HRC<35)
161	CASING COVER COPERCHIO DEL CORPO	1	ASTM A494 CW6MC (HRC<35)
210	SHAFT ALBERO	1	ASTM B446 N06625
230	IMPELLER GIRANTE	1	ASTM A494 CW6MC
321	RADIAL BALL BEARING CUSCINETTO RADIALE A SFERE	1	SKF 6218 C3
323	THRUST BALL BEARING REGGISPINTA A SFERE	2	SKF 7317 BE CB M
355	BEARING BRACKET HOUSING CASSA SUPPORTO	1	ASTM A352 Gr. LCB
360-01	BEARING COVER INT. COPERCHIO DEL SUPPORTO INT.	1	ASTM A576 Gr. 1045
360-02	BEARING COVER EXT. COPERCHIO DEL SUPPORTO EXT.	1	ASTM A576 Gr. 1045
400-01	GASKET INT. GURNIZIONE PIANA INT.	1	Synthetic rubber
400-02	GASKET EXT. GUARNIZIONE PIANA EST.	1	Synthetic rubber
411	SPIRAL WOUND GASKET 259x236x3.2 GURANIZIONE SPIROMETALLICA	1	GRAPHITE + AISI 316L
412	O-RING SEAL OR 248 ANELLO O-RING	2	FKM
423	LABYRITNH RING ANELLO DI TENUTA A LABIRINTO	2	ASTM B505 UNS C93200
433	MECHANICAL SEAL TENUTA MECCANICA	1	KE01-A1-PYPM07A-F99-0001-000
502	STATIONARY WEAR RING Ø186.6 ANELLO DI USURA FISSO Ø186.6	1	ASTM B564 N06625 +Stellite 6

503	IMPELLER WEAR RING Ø186.12 ANELLO DI USURA GIRANTE Ø186.12	1	ASTM B564 N06625 +Stellite 6
507	DEFLECTOR DEFLETTORE	2	ASTM B505 UNS C93200
513	INSERT RING ANELLO SUPPLEMENTARE	2	ASTM A576 Gr. 1045
562-01	CYLINDRICAL DOWEL PIN PERNO CILINDRICO	1	ASTM A193 Gr. B8M
562-02	CYLINDRICAL DOWEL PIN PERNO CILINDRICO	1	ASTM A193 Gr. B8M
638	CONSTANT LEVEL OILER OLIATORE A LIVELLO CONSTANTE	1	PIREX + SILUMIN
642	OIL LEVEL SIGHT GLASS TAPPO LIVELLO OLIO	1	ALUMINIUM + GLASS
644	LUBRICATING RING ANELLO DI LUBRIFICAZIONE	1	ASTM B283 UNS C37700
760	NIPPLE 1/4" NPT NIPPLO 1/4" NPT	1	A182 Gr.316 (A4 ISO 3506)
901-01	HEXAGON SCREW M16x50 VITE A TESTA ESAGONALE M16x50	4	ASTM A320 Gr. L7
901-02	HEXAGON SCREW M8x30 VITE A TESTA ESAGONALE M8x30	4	ASTM A320 Gr. L7
902-01	STUD M16x100 VITE PRIGIONIERA M16x100	4	ASTM A193 Gr. B8M
902-02	STUD M24x60 VITE PRIGIONIERA M24x60	4	ASTM A320 Gr. L7
902-03	STUD M24x70 VITE PRIGIONIERA M24x70	20	ASTM A320 Gr. L7
903-01	PLUG 1/2" NPT TAPPO 1/2" NPT	4	A182 Gr.316 (A4 ISO 3506)
903-02	PLUG 1" NPT TAPPO 1" NPT	1	A182 Gr.316 (A4 ISO 3506)

904-01	GRUBSCREW M6x12 GRANO DI RIFERIMENTO M6x12	6	ASTM B446 N06625
904-02	GRUBSCREW M6x8 GRANO DI RIFERIMENTO M6x8	2	ASTM A193 Gr. B8M
904-03	GRUBSCREW M10x25 GRANO DI RIFERIMENTO M10x25	1	ASTM B446 N06625
904-04	GRUBSCREW M6x12 GRANO DI RIFERIMENTO M6x12	4	ASTM A193 Gr. B8M
904-05	GRUBSCREW M4x10 GRANO DI RIFERIMENTO M4x10	2	ASTM A193 Gr. B8M
910	EYEBOLT M16 GOLFARE M16	1	ASTM A193 Gr. B8M
913	VENT/FILLING PLUG 1/2" NPT TAPPO DI SFIATO E RIEMPIMENTO 1/2" NPT	1	AISI 316
920-01	NUT M16 DADO M16	4	ASTM A194 Gr. 8M
920-02	NUT M24 DADO M24	4	ASTM A194 Gr. 7 Supp. Req. S3
920-03	NUT M24 DADO M24	20	ASTM A194 Gr. 7 Supp. Req. S3
922	IMPELLER NUT M33x2 DADO DI BLOCCAGGIO GIRANTE M33x2	1	ASTM B446 N06625
923	LOCK NUT M85x2 GHIERA FILETTATA M85x2	1	SKF KM 17
931	LOCK WASHER M85 ROSETTA DI SICUREZZA M85	1	SKF MB 17
940-01	KEY 18x11x105 LINGUETTA 18x11x105	1	ASTM B446 N06625
940-02	KEY 20x12x145 LINGUETTA 20x12x145	1	ASTM A276 Tp. 420

OIL Type : ISO VG 46
OIL Quantity : 3.5 lt

RADIAL CLEARANCE (mm)	
NOMIN. MIN. : MAX.	
A	0.24 : 0.289

REV.	DATE	DESCRIPTION OF REVISION	DRAW.	CHK'D.	APR'D.	ENG. MNG.	PROJ. MNG.	NCOC
002	18.10.2021	ISSUED FOR REVIEW	C.C.	F.O.	T.P.			
001	16.07.2021	ISSUED FOR REVIEW	C.C.	F.O.	T.P.			

DRAWING BY	CHECKED BY	APPROVED	ENG. MNG.	PROJ. MNG.	NCOC N.V.
COSMIN CERCEL	FRANCESCO ODEVEN	TIZIANO PUCCETTI			

COMPANY: NORTH CASPIAN OPERATING COMPANY N.V.
PROJECT: KASHAGAN DEVELOPMENT EXPERIMENTAL PROGRAM.
CONTRACT NUMBER: UI166584

DOCUMENT TITLE

NEW WATER TREATING FACILITIES

Cross Sectional Drawings with part list for Pre-Treatment Feed Pumps (A1-570-PA-065 A/B)

ЗАРЕЗЕРВИРОВАННО ДЛЯ
РУССКОГО ТЕКСТА
РУССКОГО ТЕКСТА
РУССКОГО ТЕКСТА

REV	DESCRIZIONE/DESCRIPTION	COMPILATO COMPILED	CONTROLLATO CHECKED	VERIFICATO VERIFIED	APPROVATO APPROVED	DATA DATE
01	REVISED WHERE INDICATED	CERCEL	ODEVEN	ODEVEN	PUCCETTI	18.10.21
00	FIRST ISSUE	CERCEL	ILIESCU	ODEVEN	PUCCETTI	16.07.21

CLIENTE/CUSTOMER: PETROFAC / NCOC
COSTRUZIONE/CONSTRUCTION: 100 AP 40/A 20453
DESCRIZIONE/DESCRIPTION: PUMP SECTIONAL DRAWING & PART LIST
FOGLIO/SHEET: N 001
SEGUE/FOLLOW: N /
SCALA/SCALE: :
TM.P. S.p.A. TERMOMECCANICA Pompe La Spezia - Italy
RES | F.to | A1
DISEGNO/DRAWING: 2045395010

DOCUMENT NUMBER: KE01-A1-PYPM07A-F05-0009-000

SCALE	SH. / OF	REV.
N.T.S.	1/1	002

THIS DRAWING AND THE DESIGN IT COVERS ARE THE PROPERTY OF NCOC N.V. THEY ARE MERELY LOANED AND ON THE BORROWERS EXPRESS AGREEMENT THAT THEY WILL NOT BE REPRODUCED COPIED LOANED EXHIBITED NOR USED EXCEPT IN THE LIMITED WAY AND PRIVATE USE PERMITTED AND WRITTEN CONSENT GIVEN BY NCOC N.V. TO THE BORROWER.

This document is Company property, The Company lawfully reserves all rights.

UNI A1 (841X594)